CHANGES			
SYM.	BY	REVISION	DATE

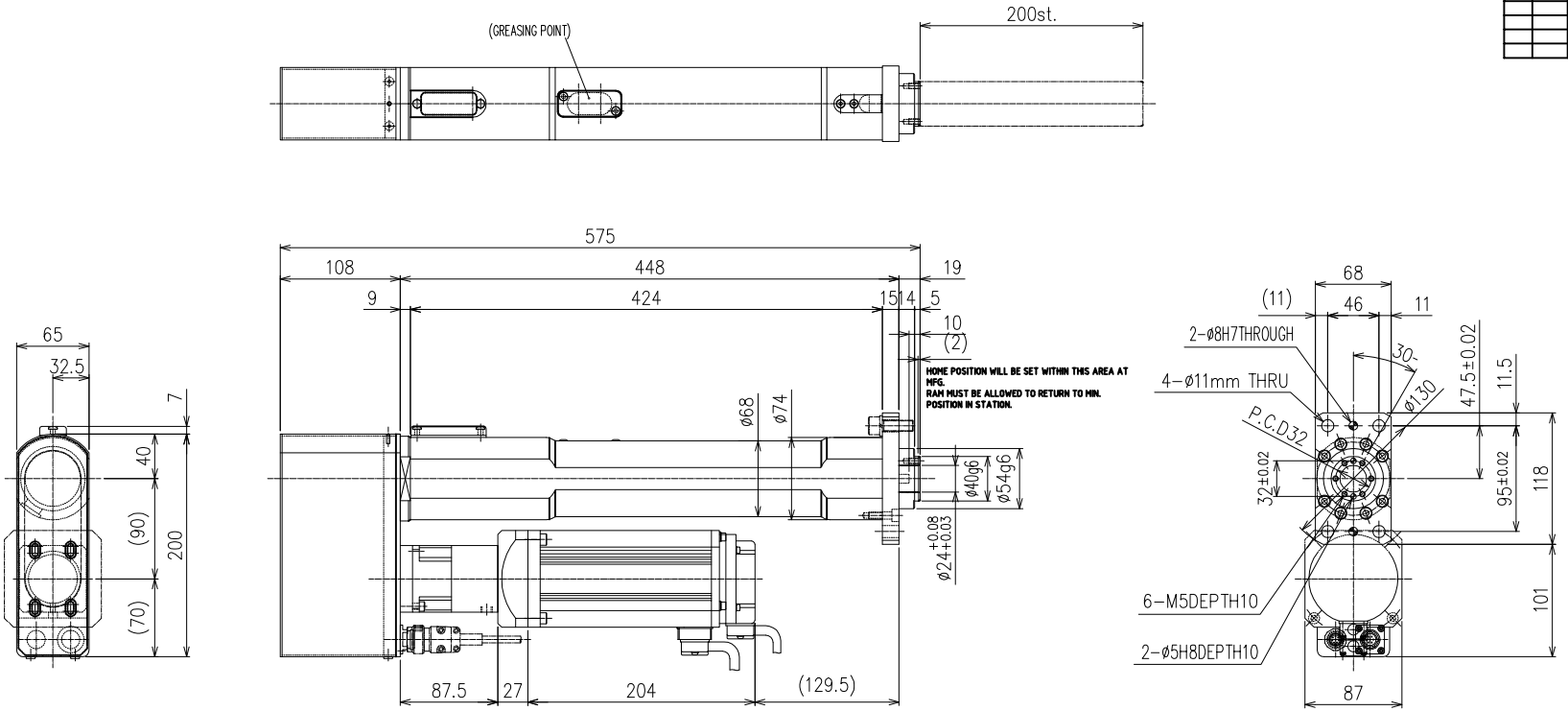

10kN Slimline	
Maximum Load	10 kN
Max. Continuous Load	10 kN
Max. Speed	160 mm/sec
Std. Stroke	200 mm
Weight	21 kgf
Load Accuracy*	$3\sigma/X \leqq 1.5\%$
Distance Repeatability*	±0.01mm
SENSOR OUTPUT	NPN

*When load is constant.

TOLERANCE UNLESS OTHERWISE SPECIFIED

INCH	METRIC
.XX=±.01	.X=±.25
.XXX=±.005	.XX=±.127
.XXXX=±.0005	.XXX=±.0127
ANGLE=±.5°	ANGLE=±.5°

1. DO NOT SCALE DRAWING.
2. BREAK ALL SHARP CORNERS & EDGES EXCEPT AS NOTED.
3. USE HI-COLLAR LOCKWASHERS UNDER ALL SOC. HD. SCREWS.
4. APPLY LOC-TITE TO ALL SCREWS.

NOTICE OF PROPRIETARY RIGHTS

The design concepts and engineering detail embodied in this drawing are the property of FEC INC. and are to be maintained in strict confidence; no element or detail of this drawing is to be disclosed nor used without the express written permission of FEC INC.

AMT	SYM	SHT	NAME	PART #	MFG.

FEC INC FASTENING AUTOMATION www.fec-usa.com

DES.BY FEC	DET.BY FEC	TITLE EXTERNAL PRESS DRAWING
CHK.BY FEC	SAFETY CK.	
DATE 00/00/00	SCALE 1/2	
SHEET 1	SHEETS 1	DRAWING NO. DPS-101R4H-20PB