CHANGES			
SYM.	BY	REVISION	DATE
–	FEC	UPDATED TO FEC TITLE BLOCK	10/1/16

SERVO PRESS SPECIFICATION	
MAX. LOAD	1 kN
LOAD OF CONTINUOUS RATINGS	0.55 kN
MAX. SPEED	130 mm/sec
STROKE	150 mm
WEIGHT	4.6 kgf
LOAD ACCURACY ※1	3σ/X ≦ 3.0%
DISTANCE ACCURACY ※1	±0.01mm以下
MAXIMUM ROTATING PLAY OF RAM ※2	0.1 deg

※1 UNDER A CONSTANT LOAD
※2 MAXIMUM GAP OF TOLERANCE

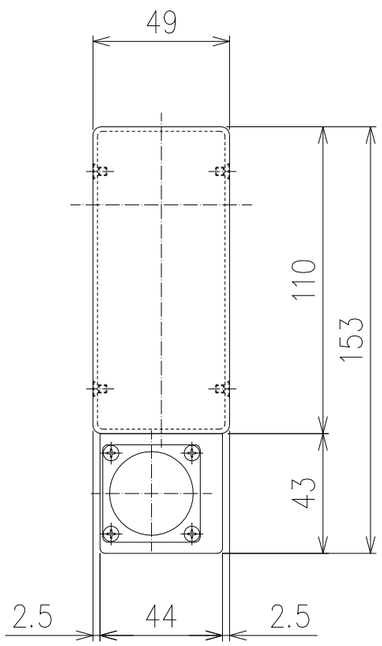

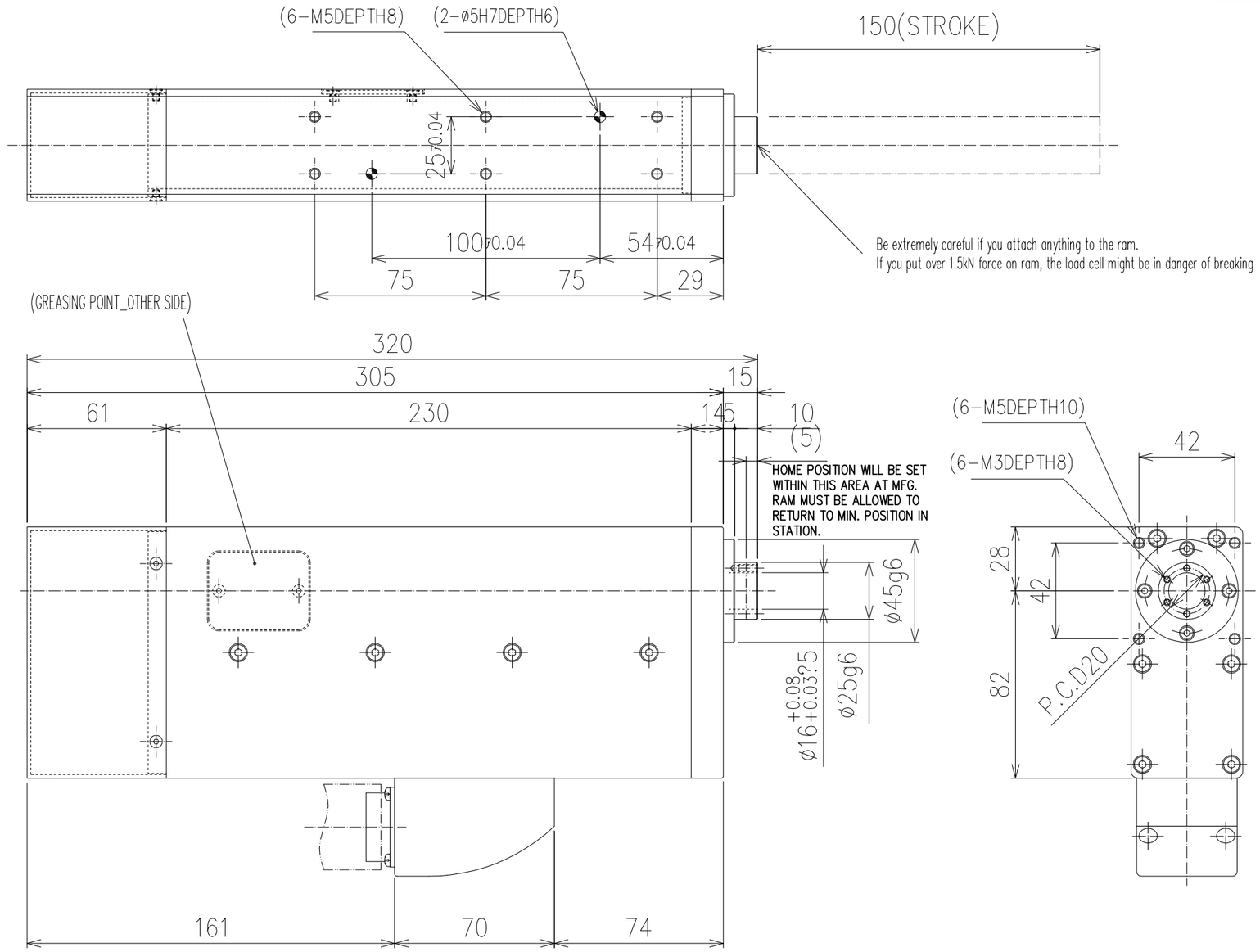

TOLERANCE UNLESS OTHERWISE SPECIFIED

INCH	METRIC
.XX=±.01	.X=±.25
.XXX=±.005	.XX=±.127
.XXXX=±.0005	.XXX=±.0127
ANGLE=±.5°	ANGLE=±.5°

1. DO NOT SCALE DRAWING.
2. BREAK ALL SHARP CORNERS & EDGES EXCEPT AS NOTED.
3. USE HI-COLLAR LOCKWASHERS UNDER ALL SOC. HD. SCREWS.
4. APPLY LOC-TITE TO ALL SCREWS.

NOTICE OF PROPRIETARY RIGHTS
The design concepts and engineering detail embodied in this drawing are the property of FEC INC. and are to be maintained in strict confidence; no element or detail of this drawing is to be disclosed nor used without the express written permission of FEC INC.

AMT	SYM	SHT	NAME	PART #	MFG.

FEC INC FASTENING AUTOMATION
51341 CELESTE
SHELBY TWP, MI 48315
OFFICE: (586) 580-2622

DES.BY	DET.BY	TITLE
FEC	FEC	EXTERNAL PRESS DRAWING
CHK.BY	SAFETY OK	
FEC		
DATE	SCALE	
10/1/16	1/2	
SHEET	SHEETS	DRAWING NO.
1	1	DPM-011H1-15F