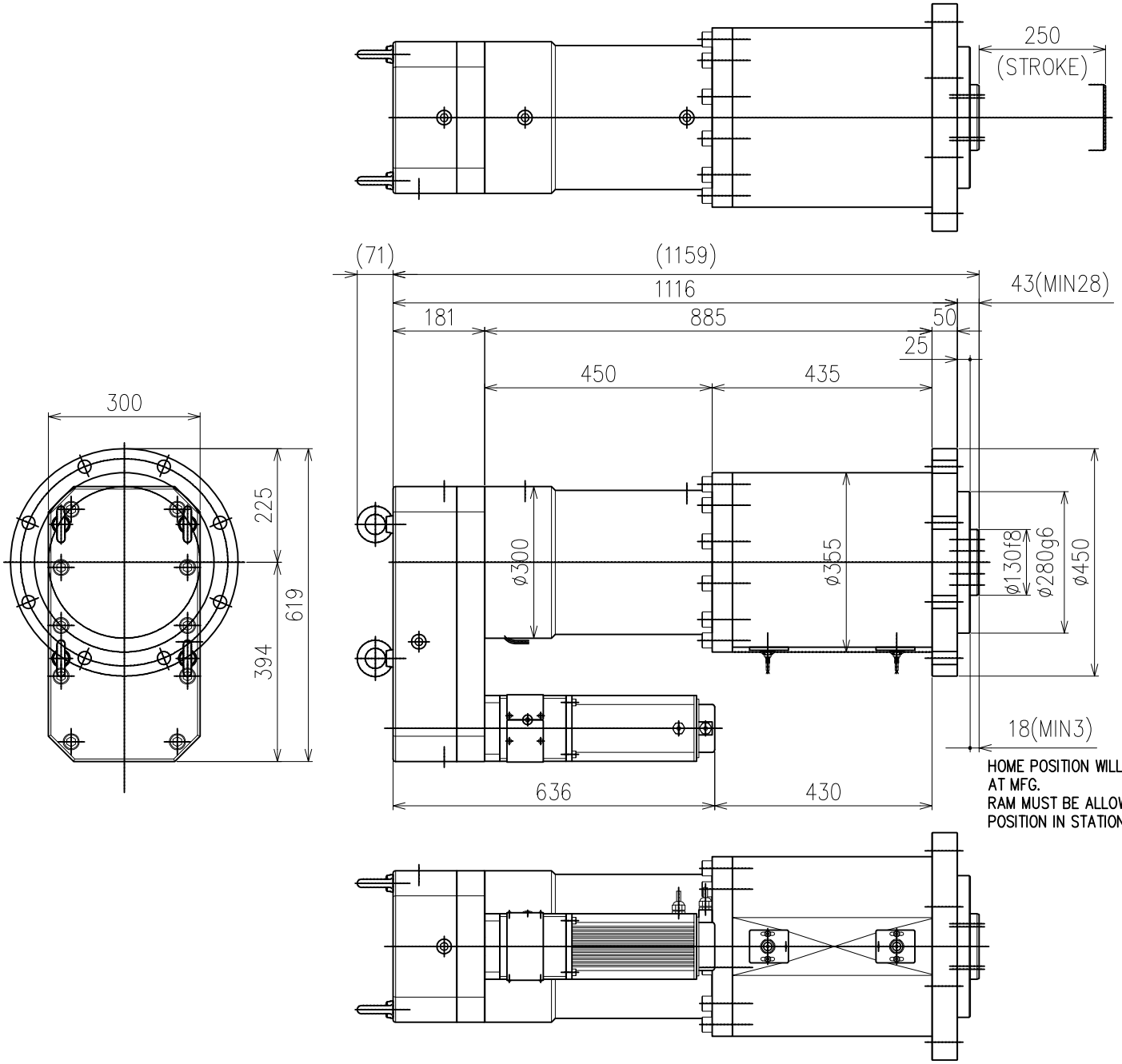

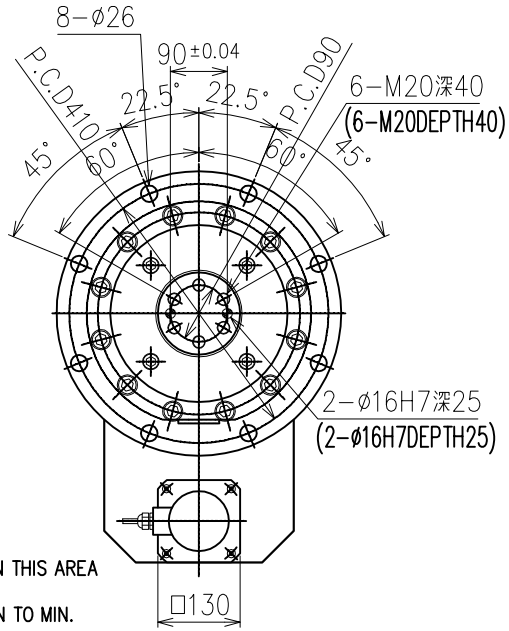

HOME POSITION WILL BE SET WITHIN THIS AREA AT MFG.
RAM MUST BE ALLOWED TO RETURN TO MIN. POSITION IN STATION.

(MAX. LOAD) 196kN
(MAX. SPEED) 58mm/sec

TOLERANCE UNLESS OTHERWISE SPECIFIED

INCH	METRIC
.XX=±.01	.X=±.25
.XXX=±.005	.XX=±.127
.XXXX=±.0005	.XXX=±.0127
ANGLE=±.5°	ANGLE=±.5°

1. DO NOT SCALE DRAWING.
2. BREAK ALL SHARP CORNERS & EDGES EXCEPT AS NOTED.
3. USE HI−COLLAR LOCKWASHERS UNDER ALL SOC. HD. SCREWS.
4. APPLY LOC−TITE TO ALL SCREWS.

NOTICE OF PROPRIETARY RIGHTS
The design concepts and engineering detail embodied in this drawing are the property of FEC INC. and are to be maintained in strict confidence; no element or detail of this drawing is to be disclosed nor used without the express written permission of FEC INC.

ART	SYM	SHT	NAME	PART #	MFG.

FEC INC FASTENING AUTOMATION
51327 QUADRATE DRIVE
MACOMB TWP, MI 48042
OFFICE: (586) 781−2100

DES.BY FEC	DET.BY FEC	TITLE EXTERNAL PRESS DRAWING
CHK.BY FEC	SAFETY OK	
DATE 00/00/00	SCALE 1/3	
SHEET 1	SHEETS 1	DRAWING NO. DPT−202R5A−25FQB

DU−P90 2007.3.26