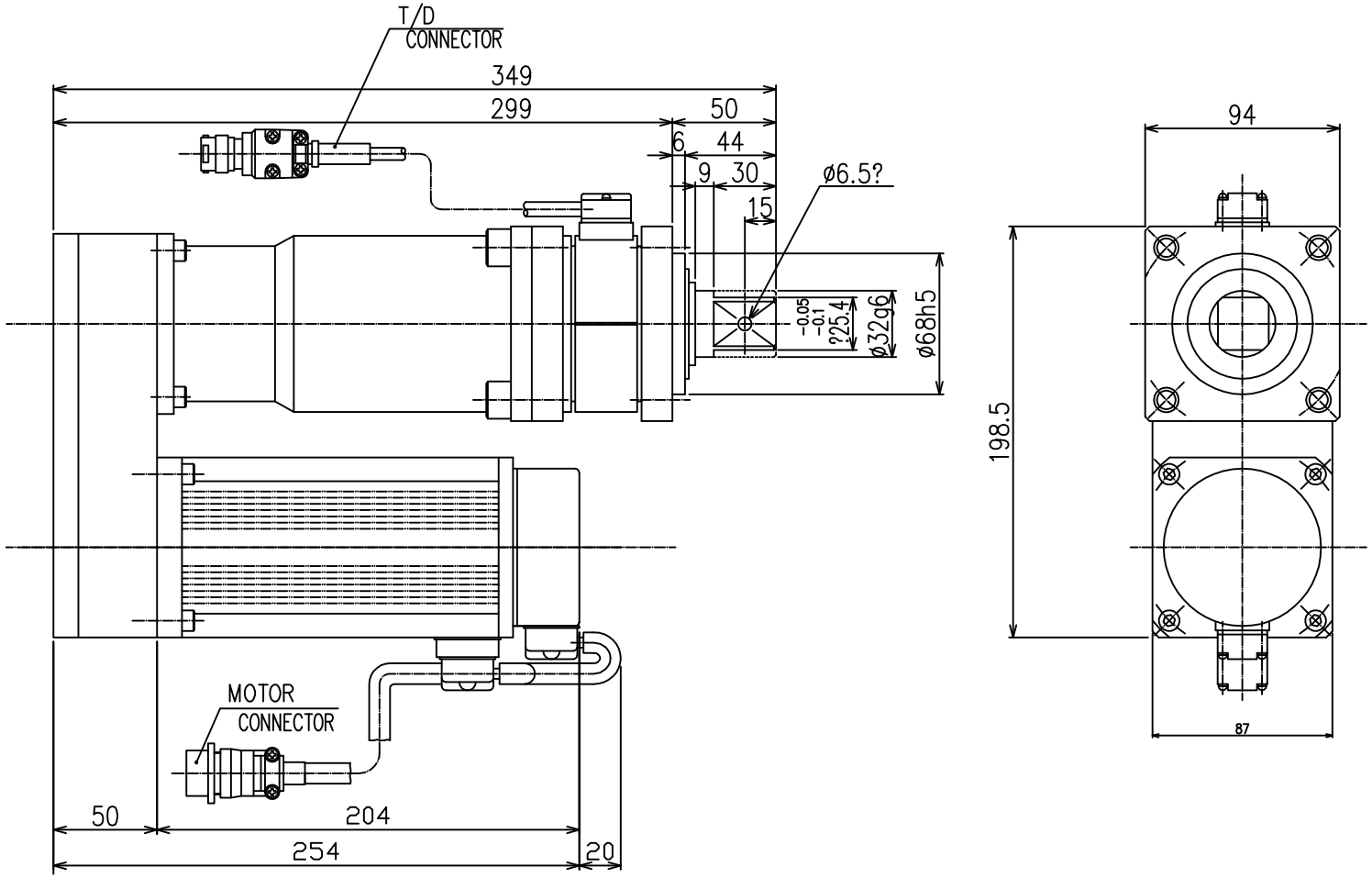

1. FULL SCALE TORQUE 80Kgfm (784Nm)
2. MAX. FREE SPEED 95 RPM
3. (WEIGHT) x Kg

TOLERANCE UNLESS OTHERWISE SPECIFIED

INCH	METRIC
.XX=±.01	.X=±.25
.XXX=±.005	.XX=±.127
.XXXX=±.0005	.XXX=±.0127
ANGLE=±.5°	ANGLE=±.5°

BREAK ALL SHARP CORNERS & EDGES EXCEPT AS NOTED
DO NOTE SCALE DRAWING

NOTICE OF PROPRIETARY RIGHTS

The design concepts and engineering detail embodied in this drawing are the property of FEC INC and are to be maintained in strict confidence; no element or detail of this drawing is to be disclosed nor used without the express written permission of FEC INC.

AMT	SYM	SHT	NAME	PART #	MFG.

FEC INC FASTENING AUTOMATION
31327 QUADRATE DRIVE
MACOMB TWP, MI 48042
OFFICE: (586) 781-2100

DES.BY	DET.BY	TITLE
CHK.BY	SAFETY OK	TOOL ASSEMBLY DRAWING FOR A NFT-802RM4-SU TOOL
DATE 3/1/05	SCALE FULL	
SHEET	SHEETS	DRAWING NO. NFT-802RM4-SU