CHANGES			
SYM.	BY	REVISION	DATE

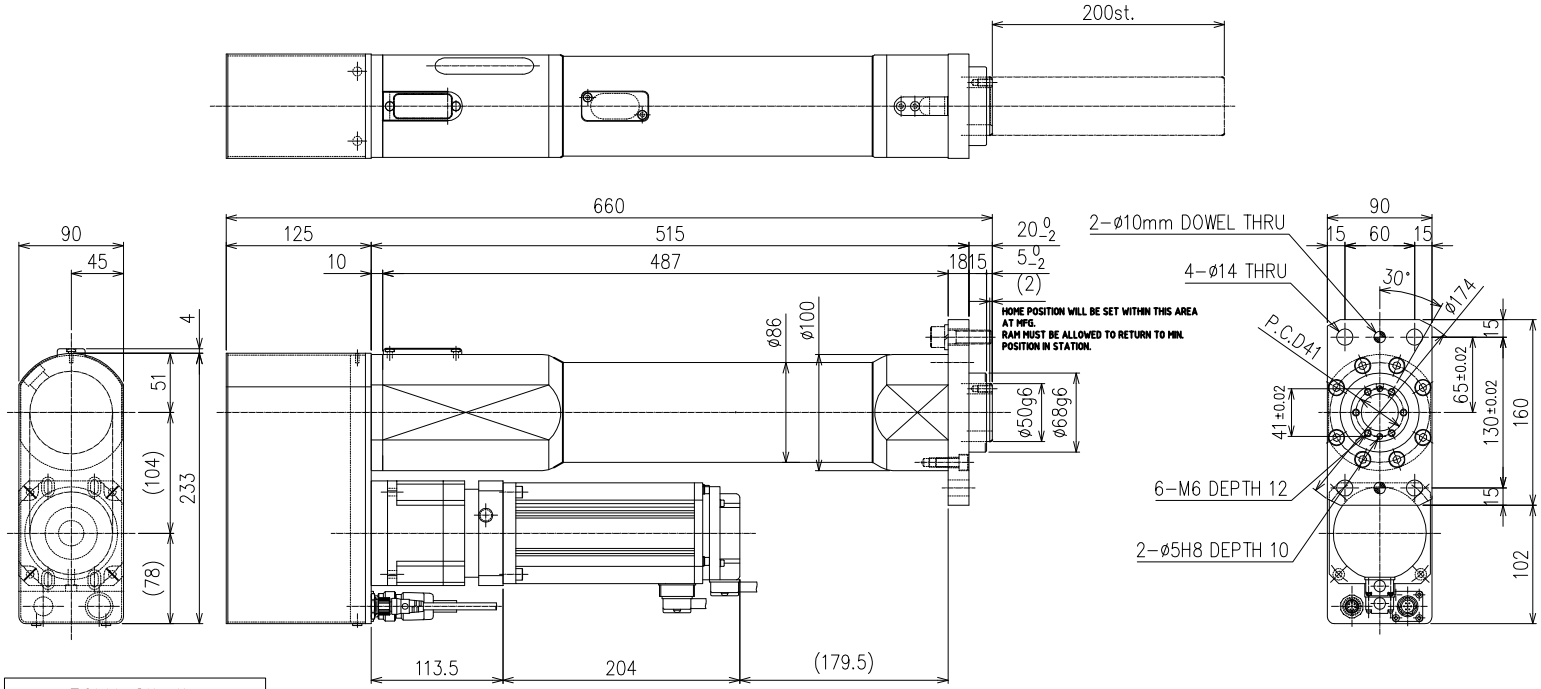

30kN Slimline	
Maximum Load	30 kN
Max. Continuous Load	12 kN
Max. Speed	200 mm/sec
Std. Stroke	200 mm
Weight	36.5 kgf
Load Accuracy*	3σ/? ? 1.5?
Distance Repeatability*	±0.01mm

*When load is constant.

TOLERANCE UNLESS OTHERWISE SPECIFIED

INCH	METRIC
.XX=±.01	.X=±.25
.XXX=±.005	.XX=±.127
.XXXX=±.0005	.XXX=±.0127
ANGLE=±.5°	ANGLE=±.5°

1. DO NOT SCALE DRAWING.
2. BREAK ALL SHARP CORNERS & EDGES EXCEPT AS NOTED.
3. USE HI-COLLAR LOCKWASHERS UNDER ALL SOC. HD. SCREWS.
4. APPLY LOC-TITE TO ALL SCREWS.

NOTICE OF PROPRIETARY RIGHTS

.The design concepts and engineering detail embodied in this drawing are the property of FEC INC. and are to be maintained in strict confidence; no element or detail of this drawing is to be disclosed nor used without the express written permission of FEC INC.

AMT	SYM	SHT	NAME	PART #	MFG.

FEC INC FASTENING AUTOMATION www.fec-usa.com

DES.BY FEC	DET.BY FEC	TITLE EXTERNAL PRESS DRAWING
CHK.BY FEC	SAFETY OK	
DATE 00/00/00	SCALE 1/2	DPS-300R6H-20FB
SHEET 1	SHEETS 1	DRAWING NO. DPS-301R4H-20FB