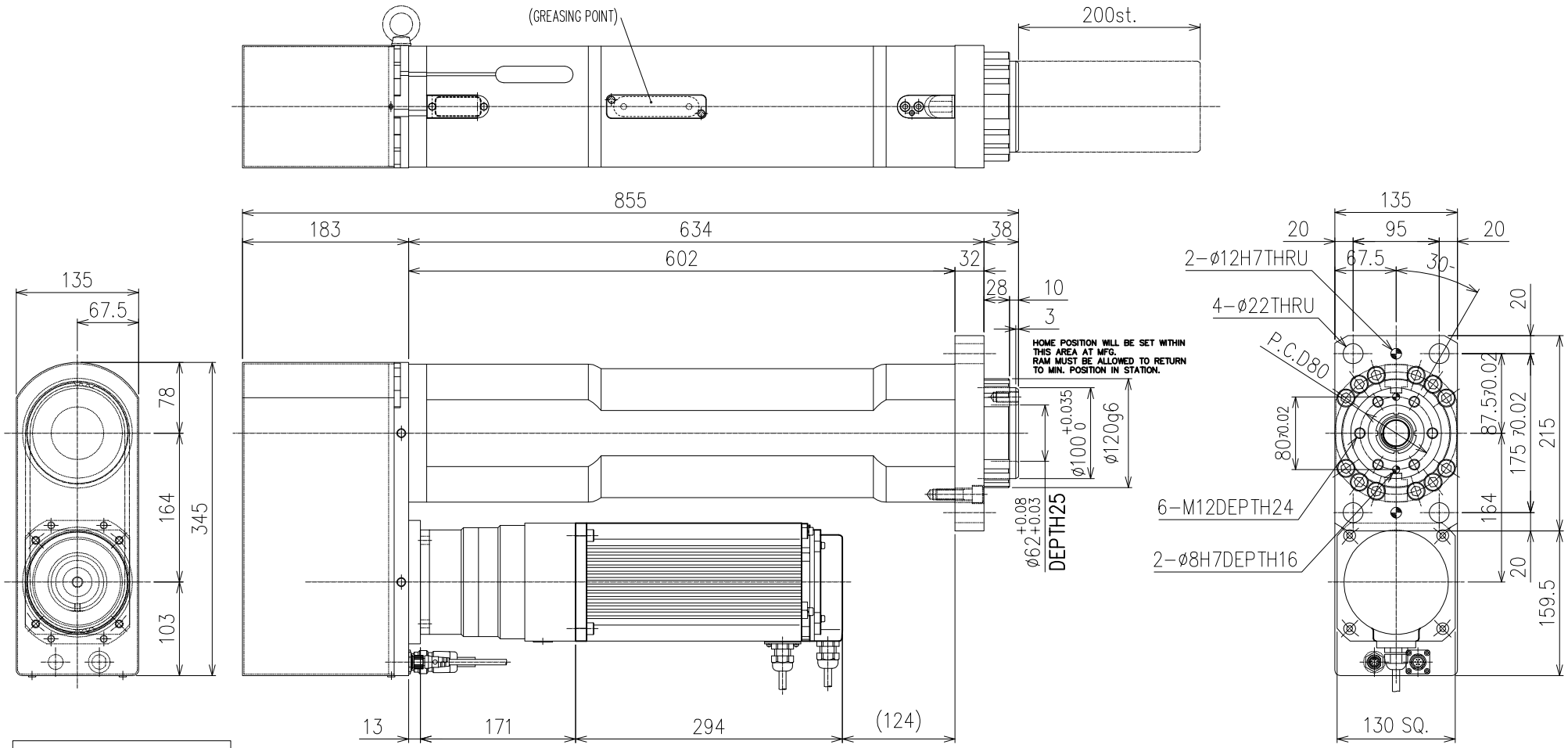


| SERVO PRESS SPECIFICATION | |
|---|---|
| MAX. LOAD | 100 kN |
| LOAD OF CONTINUOUS RATINGS | 32 kN |
| MAX. SPEED | 133 mm/sec |
| STROKE | 200 mm |
| WEIGHT | 110 kgf |
| LOAD ACCURACY ※1 | 3σ/X ≦ 1.5% |
| DISTANCE ACCURACY ※1 | ±0.01mm |
| MAXIMUM ROTATING PLAY OF RAM ※2 | 0.081 deg |
| SENSOR OUTPUT | NPN |

※1) 荷重一定の場合のデータ DATA UNDER A CONSTANT LOAD
※2) 公差スキマが最大の場合の数値 MAXIMUM GAP OF TOLERANCE

TOLERANCE UNLESS OTHERWISE SPECIFIED

| INCH | METRIC |
|---|---|
| .XX=±.01 | .X=±.25 |
| .XXX=±.005 | .XX=±.127 |
| .XXXX=±.0005 | .XXX=±.0127 |
| ANGLE=±.5° | ANGLE=±.5° |

1. DO NOT SCALE DRAWING.
2. BREAK ALL SHARP CORNERS & EDGES EXCEPT AS NOTED.
3. USE HI-COLLAR LOCKWASHERS UNDER ALL SOC. HD. SCREWS.
4. APPLY LOC-TITE TO ALL SCREWS.

NOTICE OF PROPRIETARY RIGHTS
The design concepts and engineering detail embodied in this drawing are the property of FEC INC. and are to be maintained in strict confidence; no element or detail of this drawing is to be disclosed nor used without the express written permission of FEC INC.

| AMT | SYM | SHT | NAME | PART # | MFG. |
|---|---|---|---|---|---|

FEC INC FASTENING AUTOMATION www.fec-usa.com

| | | |
|---|---|---|
| DES.BY FEC | DET.BY FEC | TITLE DPS-102R5-20FB OUTLINE DRAWING |
| CHK.BY FEC | SAFETY OK | |
| DATE 11/23/12 | SCALE 1/4 | DDK DRAWING #DS-P001-A |
| SHEET | SHEETS | DRAWING NO. DPS-102R5-20FB |