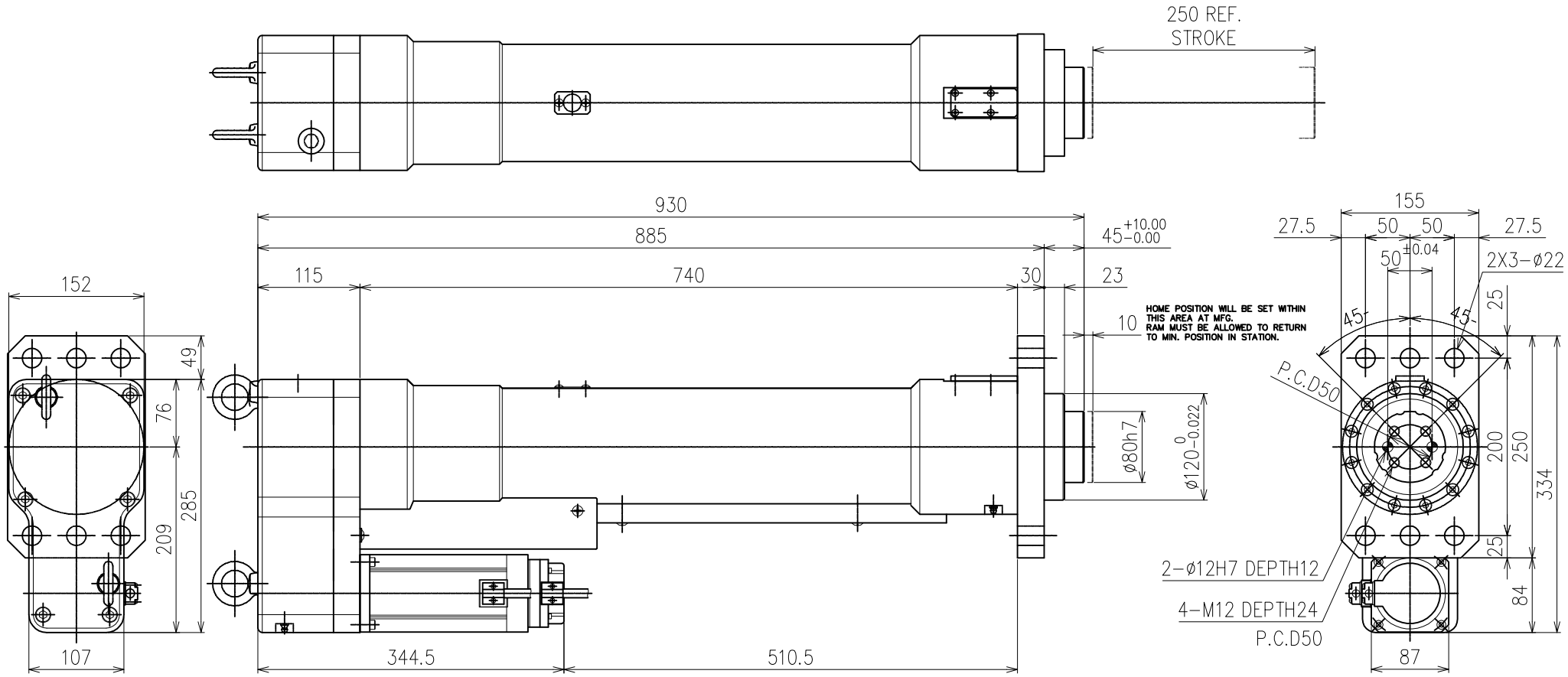


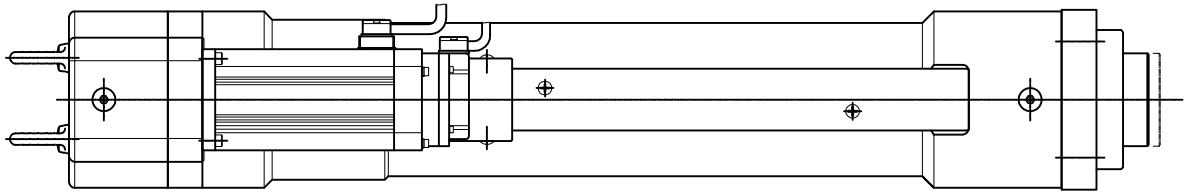

MAX LOAD 68.6kN
MAX SPEED 133mm/sec

TOLERANCE UNLESS OTHERWISE SPECIFIED

| INCH | METRIC |
|---|---|
| .XX=±.01 | .X=±.25 |
| .XXX=±.005 | .XX=±.127 |
| .XXXX=±.0005 | .XXX=±.0127 |
| ANGLE=±.5° | ANGLE=±.5° |

1. DO NOT SCALE DRAWING.
2. BREAK ALL SHARP CORNERS & EDGES EXCEPT AS NOTED.
3. USE HI-COLLAR LOCKWASHERS UNDER ALL SOC. HD. SCREWS.
4. APPLY LOC-TITE TO ALL SCREWS.

NOTICE OF PROPRIETARY RIGHTS
The design concepts and engineering detail embodied in this drawing are the property of FEC INC. and are to be maintained in strict confidence; no element or detail of this drawing is to be disclosed nor used without the express written permission of FEC INC.

| AMT | SYM | SHT | NAME | PART # | MFG. |
|---|---|---|---|---|---|
| | | | | | |

FEC INC
FASTENING AUTOMATION
51327 QUADRATE DRIVE
MACOMB TWP, MI 48042
OFFICE: (586) 781-2100

| DES.BY | DET.BY | TITLE |
|---|---|---|
| FEC | FEC | EXTERNAL PRESS DRAWING |
| CHK.BY | SAFETY OK | |
| FEC | | |
| DATE | SCALE | |
| 00/00/00 | 1/4 | |
| SHEET | SHEETS | DRAWING NO. |
| 1 | 1 | DPT−701R4H−25FSB |