CHANGES			
SYM.	BY	REVISION	DATE
-	PAG	TRANSLATED TO ENGLISH	01/24/19

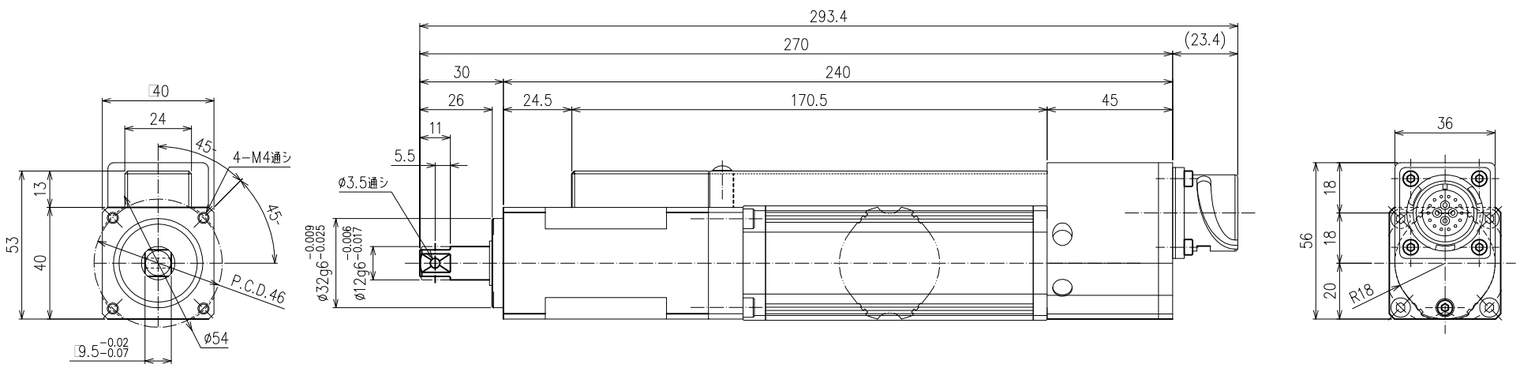

TOOL SPECIFICATIONS	
FULL SCALE TORQUE	0.5 Kgf-m (5 N-m)
MAX FREE SPEED	1330
UNIT WEIGHT	1.16 Kg (2.6 lbs.)

TOLERANCE UNLESS OTHERWISE SPECIFIED

INCH	METRIC
.XX=±.01	.X=±.25
.XXX=±.005	.XX=±.127
.XXXX=±.0005	.XXX=±.0127
ANGLE=±.5°	ANGLE=±.5°

BREAK ALL SHARP CORNERS &
EDGES EXCEPT AS NOTED
DO NOTE SCALE DRAWING

NOTICE OF PROPRIETARY RIGHTS

The design concepts and engineering detail embodied in this drawing are the property of FEC INC. and are to be maintained in strict confidence; no element or detail of this drawing is to be disclosed nor used without the express written permission of FEC INC.

AMT	SYM	SHT	NAME	PART #	MFG.

FEC INC FASTENING AUTOMATION www.fec-usa.com

DES.BY	DET.BY
CHK.BY	SAFETY OK
DATE 01/24/19	SCALE FULL
SHEET	SHEETS

TITLE
TOOL ASSEMBLY DRAWING
FOR A CFT-051RS1-S TOOL

REFERENCE DDK DWG# DS-N052

DRAWING NO.
CFT-051RS1-S